INSTALLATION INSTRUCTIONS

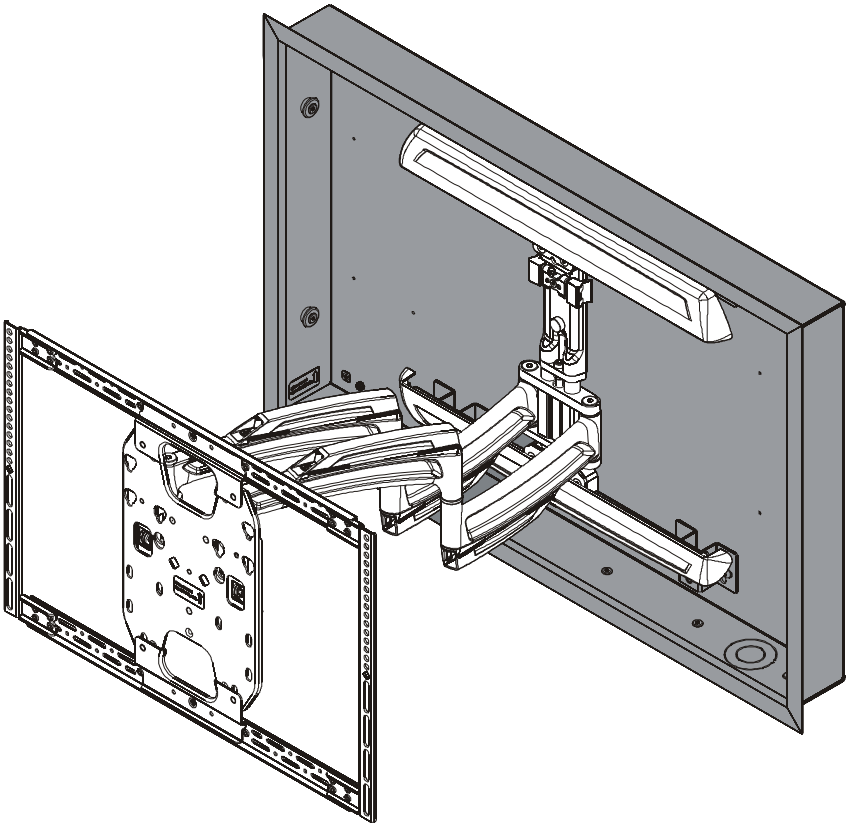

THINSTALL™ IN-WALL ENCLOSURE

CHIEF®

Our Mounts. **Your Vision.**

TA500

DISCLAIMER

Milestone AV Technologies, and its affiliated corporations and subsidiaries (collectively, “Milestone”), intend to make this manual accurate and complete. However, Milestone makes no claim that the information contained herein covers all details, conditions or variations, nor does it provide for every possible contingency in connection with the installation or use of this product. The information contained in this document is subject to change without notice or obligation of any kind. Milestone makes no representation of warranty, expressed or implied, regarding the information contained herein. Milestone assumes no responsibility for accuracy, completeness or sufficiency of the information contained in this document.

Chief® is a trademark of Milestone AV Technologies.
All rights reserved.

IMPORTANT SAFETY INSTRUCTIONS!

WARNING: A WARNING alerts you to the possibility of serious injury or death if you do not follow the instructions.

CAUTION: A CAUTION alerts you to the possibility of damage or destruction of equipment if you do not follow the corresponding instructions.

WARNING: Failure to read, thoroughly understand, and follow all instructions can result in serious personal injury, damage to equipment, or voiding of factory warranty! It is the installer’s responsibility to make sure all components are properly assembled and installed using the instructions provided.

WARNING: Failure to provide adequate structural strength for this component can result in serious personal injury or damage to equipment! It is the installer’s responsibility to make sure the structure to which this component is attached can support five times the combined weight of all equipment. Reinforce the structure as required before installing the component. The wall to which the mount is being attached may have a maximum drywall thickness of 5/8” (1.6cm).

WARNING: Exceeding the weight capacity can result in serious personal injury or damage to equipment! It is the installer’s responsibility to make sure the structure to which this accessory is attached can support the combined weight of the box and all equipment not to exceed 125 lbs (56.7 kg).

WARNING: Use this mounting system only for its intended use as described in these instructions. Do not use attachments not recommended by the manufacturer.

WARNING: Never operate this mounting system if it is damaged. Return the mounting system to a service center for examination and repair.

WARNING: Do not use this product outdoors.

NOTES:

- SUITABLE FOR USE IN OTHER ENVIRONMENTAL AIR SPACE IN ACCORDANCE WITH SECTION 300.22, (C) OF THE NATIONAL ELECTRICAL CODE.
- The equipment shall be installed and assembled by qualified service personnel.
- The maximum specified ambient temperature of the cabinet system is 40° - 120°F (4° - 49°).
- Minimum spacings between the accessories and components and the housing for Information Technology Communication Equipment shall be maintained for safe operation of the equipment when installed in accordance with the National Electric Code, ANSI/NFPA 70-1999. Refer to communication equipment manufacturer’s specifications for minimum spacings.
- This Cabinet System is for use with Listed wall mounts. Refer to the individual mount’s installation instructions for compatibility.

--SAVE THESE INSTRUCTIONS--

DIMENSIONS

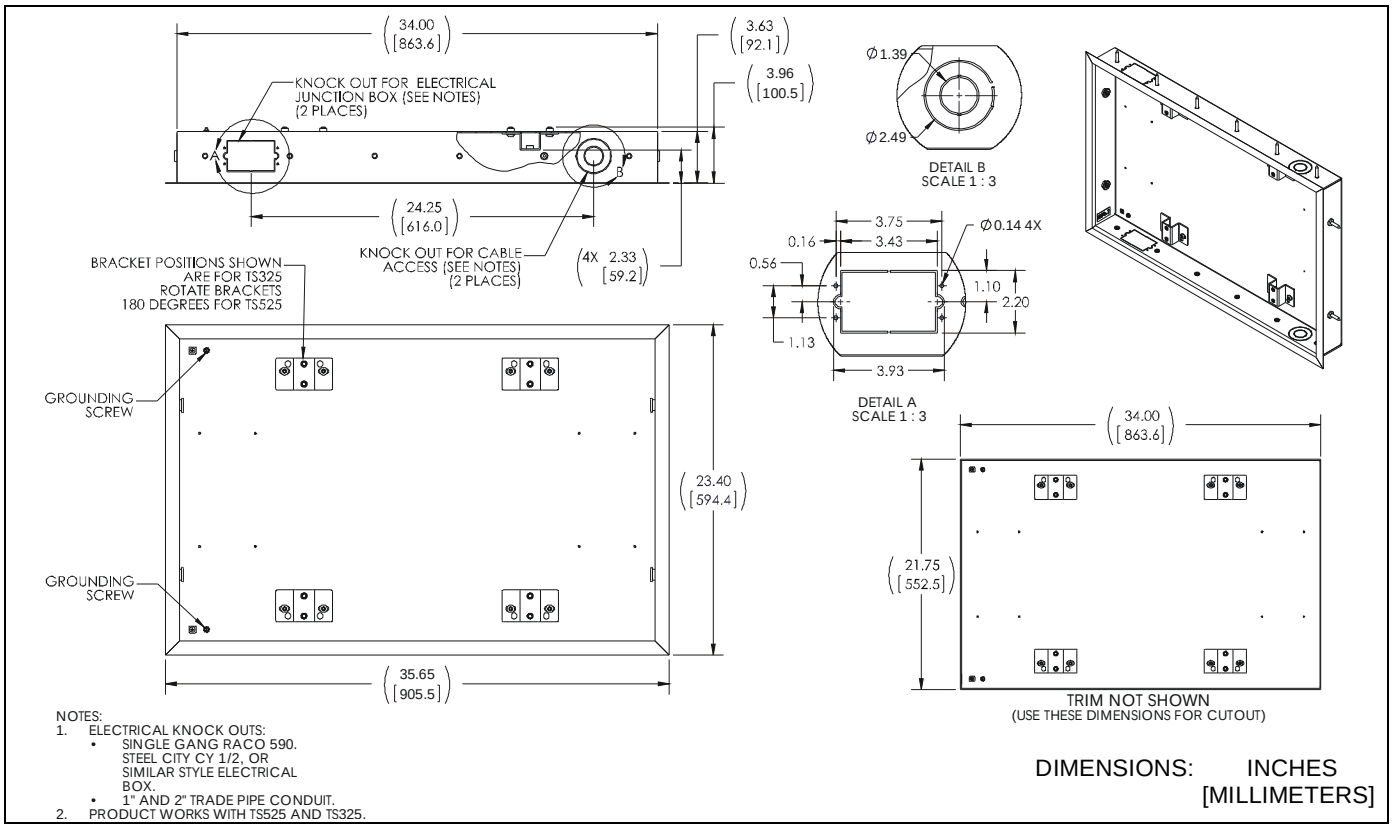

LEGEND

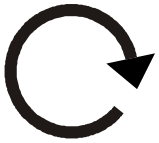	**Tighten Fastener**
	Apretar elemento de fijación
	Befestigungsteil festziehen
	Apertar fixador
	Serrare il fissaggio
	Bevestiging vastdraaien
	Serrez les fixations

	Pencil Mark
	Marcar con lápiz
	Stiftmarkierung
	Marcar com lápis
	Segno a matita
	Potloodmerkteken
	Marquage au crayon

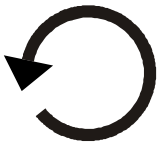	**Loosen Fastener**
	Aflojar elemento de fijación
	Befestigungsteil lösen
	Desapertar fixador
	Allentare il fissaggio
	Bevestiging losdraaien
	Desserrez les fixations

	Drill Hole
	Perforar
	Bohrloch
	Fazer furo
	Praticare un foro
	Gat boren
	Percez un trou

	Phillips Screwdriver
	Destornillador Phillips
	Kreuzschlitzschraubendreher
	Chave de fendas Phillips
	Cacciavite a stella
	Kruiskopschroevendraaier
	Tournevis à pointe cruciforme

	Hex-Head Wrench
	Llave de cabeza hexagonal
	Sechskantschlüssel
	Chave de cabeça sextavada
	Chiave esagonale
	Zeskantsleutel
	Clé à tête hexagonale

TOOLS REQUIRED FOR INSTALLATION

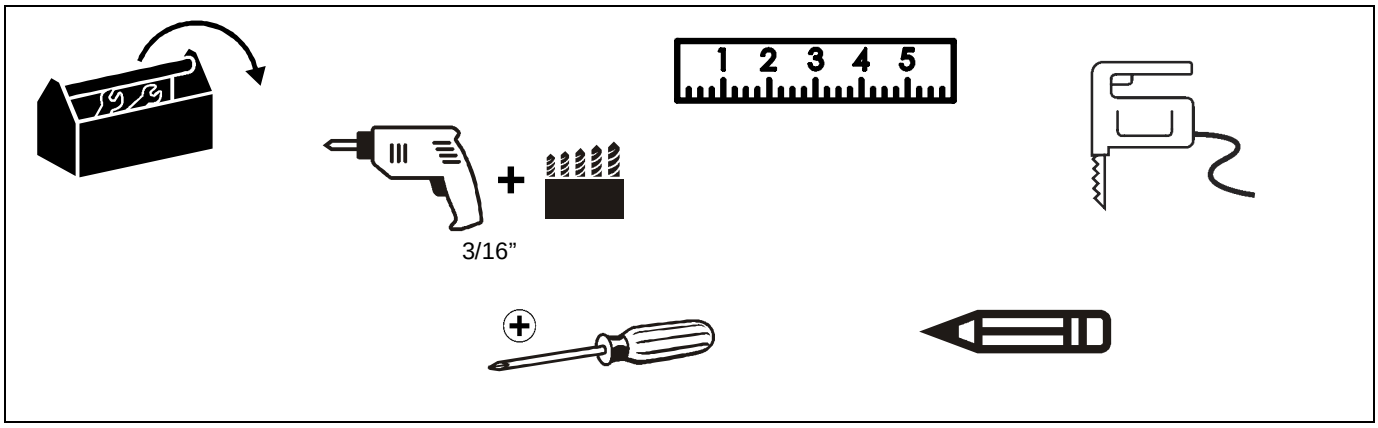

PARTS

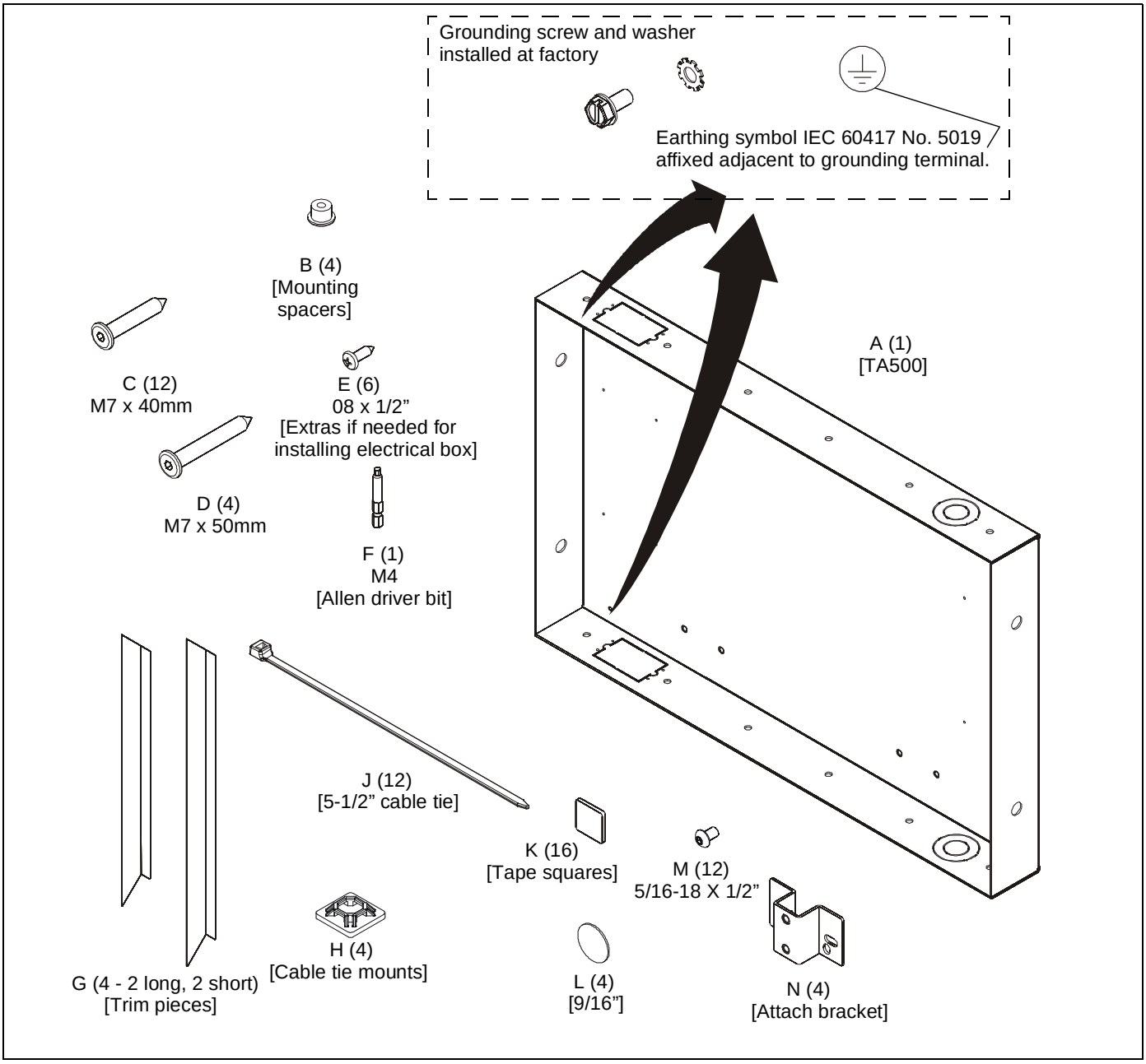

INSTALLATION

WARNING: IMPROPER INSTALLATION CAN RESULT IN DEATH OR SERIOUS PERSONAL INJURY! This accessory should be installed by qualified personnel.

Site Preparation

Locate and Prepare Mounting Site

IMPORTANT ! : The following procedure is the recommended installation method when installing to a load-bearing wall. Installation may vary based on type of wall. Consult a qualified building contractor prior to installation.

1. Identify a suitable wall location for the in-wall enclosure.

IMPORTANT ! : The TA500 is designed for in-wall installation spanning a minimum of three wood studs, 16" on center. Installation of TA500 in a wood stud wall will require additional framing to be added for support. Inadequate space will remain for electrical wires/cables, plumbing, ductwork, or insulation. Locate installation accordingly. Consult a qualified building contractor and applicable building codes.

WARNING: ELECTRICAL SHOCK HAZARD! CUTTING OR DRILLING INTO ELECTRICAL WIRES OR CABLES CAN CAUSE DEATH OR SERIOUS PERSONAL INJURY! ALWAYS make certain area behind mounting surfaces is free of electrical wires and cables before cutting, drilling, or installing fasteners.

WARNING: EXPLOSION AND FIRE HAZARD! CUTTING OR DRILLING INTO GAS PLUMBING CAN CAUSE DEATH OR SERIOUS PERSONAL INJURY! ALWAYS make certain area behind mounting surfaces is free of gas, water, waste, or any other plumbing before cutting, drilling, or installing fasteners.

2. Remove drywall from wall if already installed.

IMPORTANT ! : Consult a qualified building contractor to install housing framing and follow all applicable building codes!

NOTE: The exposed portion of the two existing wood studs must be removed and the resulting cavity completely framed with wood. The following steps are suggested. The actual procedure is dependent upon the specific installation.

WARNING: STRUCTURAL FAILURE HAZARD! FAILURE TO TAKE ADEQUATE PRECAUTIONS CAN LEAD TO DEATH OR SERIOUS INJURY! Ensure removal of studs will not cause unacceptable loss of structural strength. Consult a qualified building contractor and applicable building codes.

3. Remove exposed portion of wood studs flush with upper and lower drywall edges. (See Figure 1)

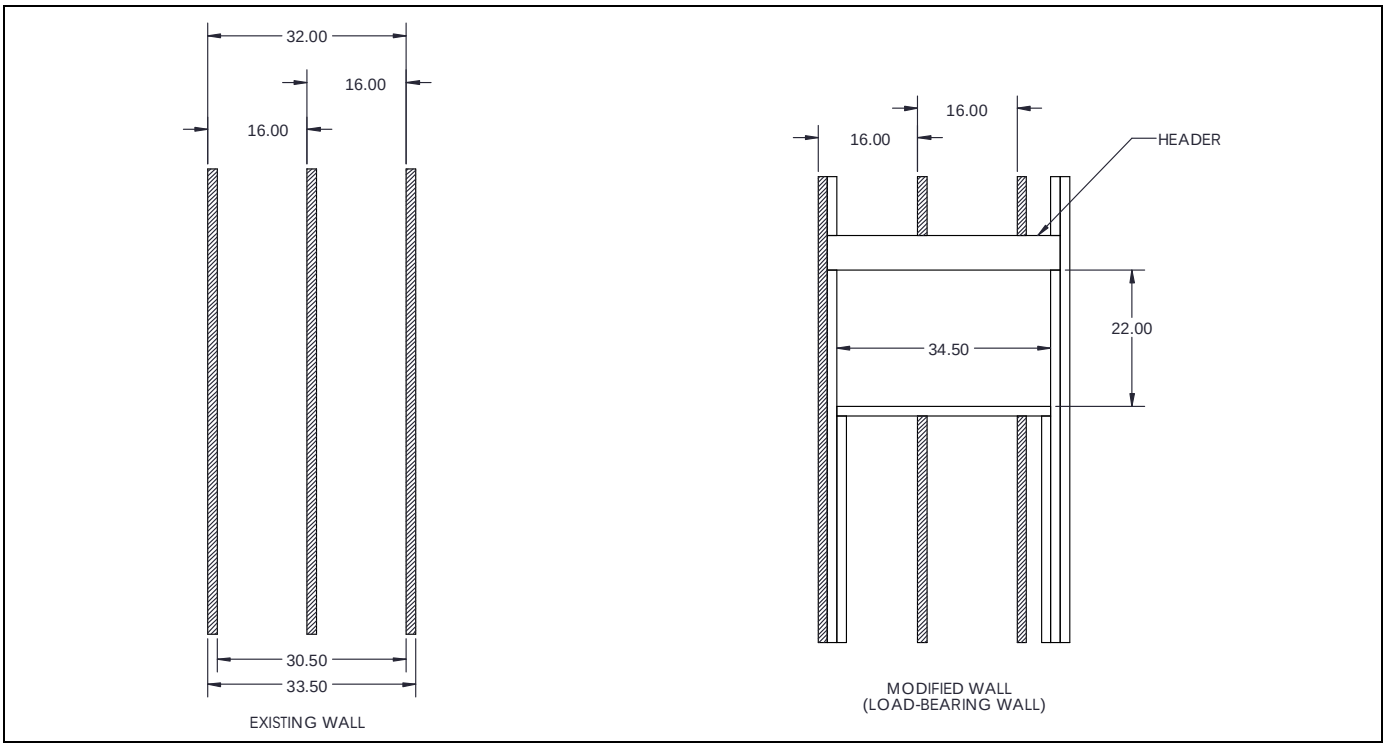

Figure 1

4. Add new stud (floor to ceiling) with outer edge 40 1/2” to the right of left edge of far left stud. (See Figure 2)

5. Add support framing inside far left stud and added stud from the floor to the lower edge of header. Use #10 x 2 1/2” countersunk wood screws (not provided) as needed to secure. (See Figure 2)

6. Install 2" x 6" header 37 1/2” long from inside edge of left stud to inside edge of new stud. Use #10 x 2 1/2” countersunk wood screws (not provided) as needed to secure.(See Figure 2)

NOTE: Size of header will depend on specific installation. Consult a qualified building contractor for advice.

7. Add support framing inside support framing added in Step 5 from the floor to the lower edge of horizontal framing. Use #10 x 2 1/2” countersunk wood screws (not provided) as needed to secure. (See Figure 2)

8. Install 34 1/2” long horizontal framing inside support framing added in Step 5. Use #10 x 2 1/2” countersunk wood screws (not provided) as needed to secure to wood studs. (See Figure 2)

9. Install two blocks from top of header to ceiling along far left stud and new stud. Use #10 x 2 1/2” countersunk wood screws (not provided) as needed to secure to wood studs. (See Figure 2)

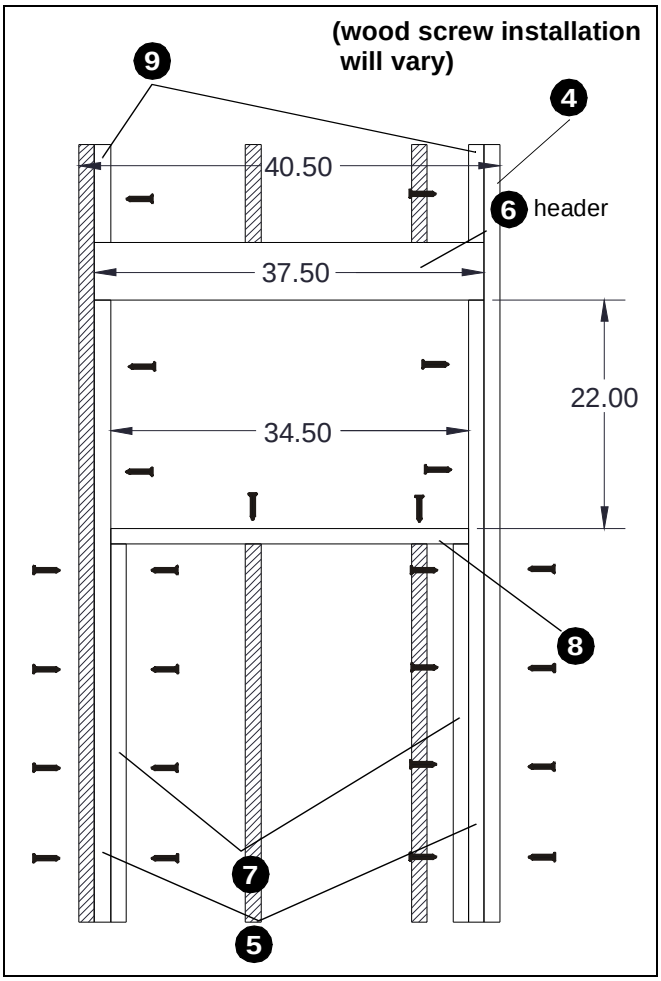

Figure 2

NOTE: Ensure screws are far enough from block end to prevent interference with framing screws installed in **In-Wall Enclosure Installation** section.

10. If necessary, cut rectangular hole in horizontal framing to accommodate the PAC-GB1 Listed electrical box accessory. (not included)

In-Wall Enclosure Installation

1. Install PAC-GB1 Listed electrical box accessory (not included) into the TA500 (A) following instructions included with the PAC-GB1.

2. Connect electrical wiring according to National Electrical Code (NEC) ANSI/NFPA 70 - 2008, wire connection requirements.

3. Route audio/visual cables into housing.

4. Center TA500 (A) in opening and insert into opening. Align front of box with front face of wall. (See Figure 3)

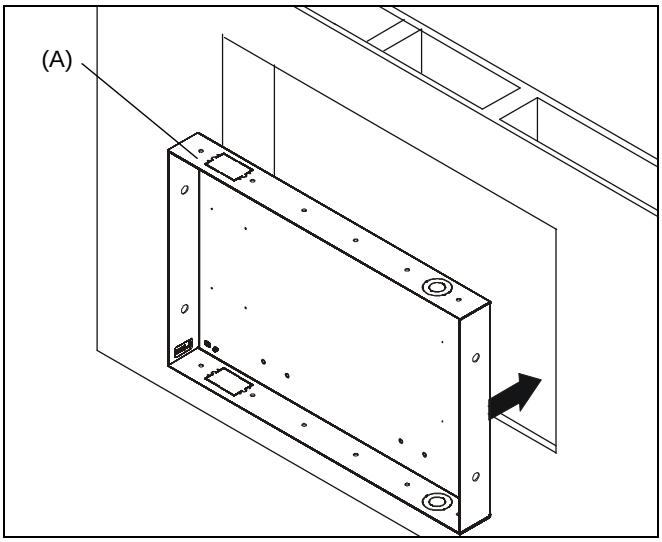

Figure 3

WARNING: ELECTRICAL SHOCK HAZARD! CUTTING OR DRILLING INTO ELECTRICAL WIRES OR CABLES CAN CAUSE DEATH OR SERIOUS PERSONAL INJURY! ALWAYS make certain area behind mounting surfaces is free of electrical wires and cables before cutting, drilling, or installing fasteners.

5. Drill four 3/16” diameter pilot holes in studs at side mounting holes. (See Figure 4)

6. Attach the TA500 (A) to side studs using four M7 x 50mm Allen head connector screws (D) and mounting spacers (B) using an M4 Allen head drill bit (F). (See Figure 4)

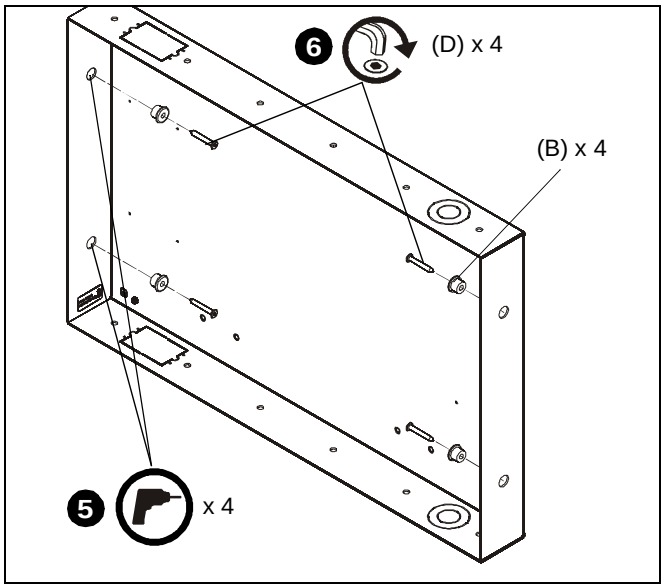

Figure 4

NOTE: The TA500 has 1/2” total clearance between the two studs. The spacers allow side to side adjustment.

7. Drill eight 3/16” diameter pilot holes in horizontal framing at top and bottom mounting holes. (See Figure 5)
8. Attach the TA500 (A) to horizontal framing using twelve M7 x 40mm Allen head connector screws (C) using an M4 Allen head drill bit (F). (See Figure 5)

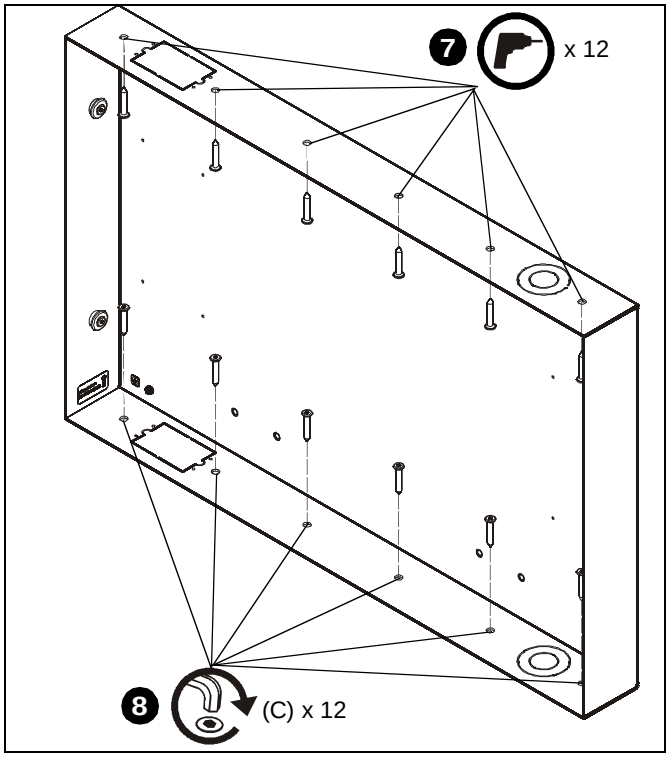

Figure 5

DANGER: IMPROPER WIRING CAN LEAD TO DEATH OR SEVERE PERSONAL INJURY! Grounding must be installed by qualified personnel using a UL Recognized No. 12AWG grounding wire connected to grounding lug on mount.

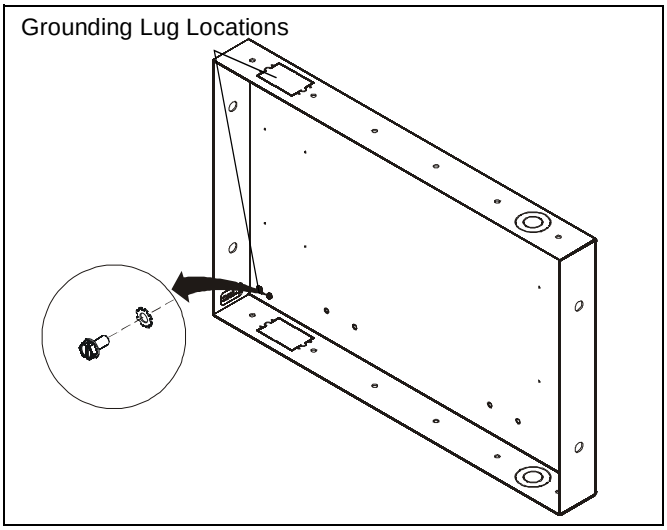

Figure 6

TS325TU/TS525TU Installation

IMPORTANT ! : The TA500 was designed specifically for the TS325TU or TS525TU wall mount. Do not attempt to install any other wall mounts with the TA500!

1. Use eight 5/16-18 x 1/2” button head cap screws (M) to attach four attachment brackets (N) to the TA500 (A). (See Figure 7) and (See Figure 8)

IMPORTANT ! : Bracket orientation is different depending on mount being installed.

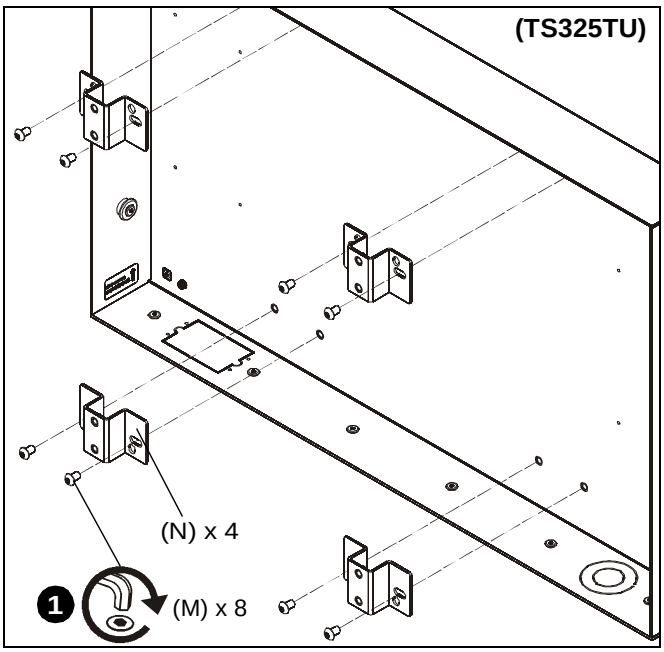

Figure 7

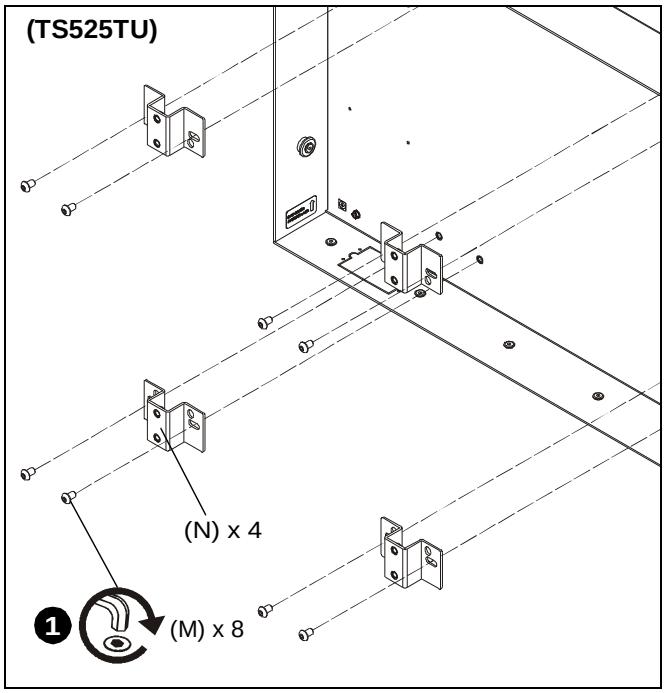

Figure 8

2. Use two 5/16-18 x 1/2” button head cap screws (M) to loosely attach upper wall plate of TS325TU/TS525TU to upper attachment brackets (N). (See Figure 9)

IMPORTANT ! : Install to upper bracket holes for TS525TU and lower bracket holes for TS325TU. See Inset on Figure 9.

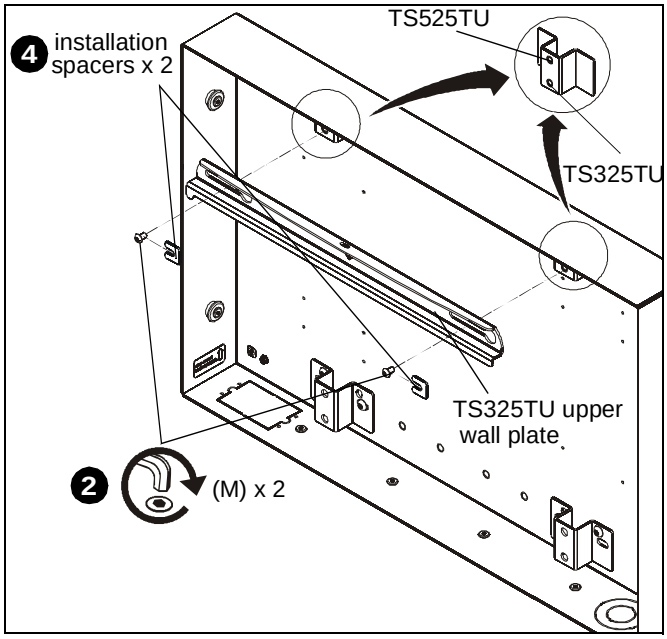

Figure 9

3. Place two installation spacers (included with TS325TU/TS525TU) over two 5/16-18 x 1/2” button head cap screws (M). (See Figure 9)

4. Tighten two screws (M) to secure upper wall plate to upper attachment brackets.

5. Slide TS325TU/TS525TU assembly onto upper wall plate of TS325TU/TS525TU. (See Figure 10)

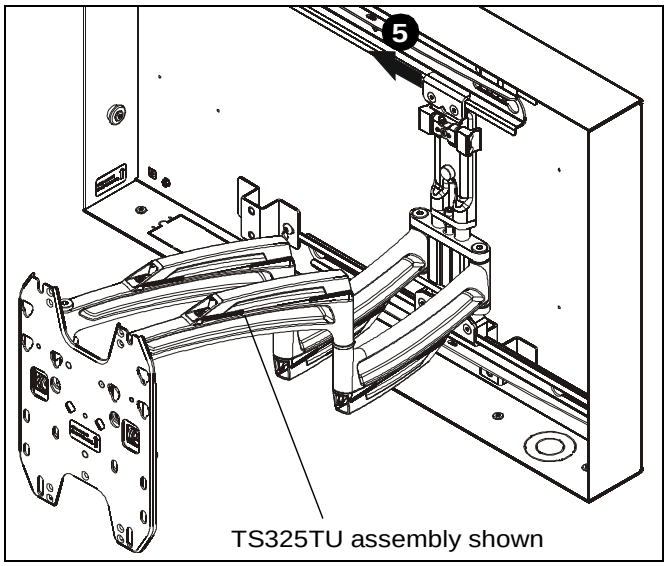

Figure 10

6. Use two 5/16-18 x 1/2” button head cap screws (M) to loosely attach lower wall plate of TS325TU/TS525TU assembly to lower attachment brackets (N). (See Figure 11)

IMPORTANT ! : Install to lower bracket holes for TS525TU and upper bracket holes for TS325TU. See inset on Figure 11.

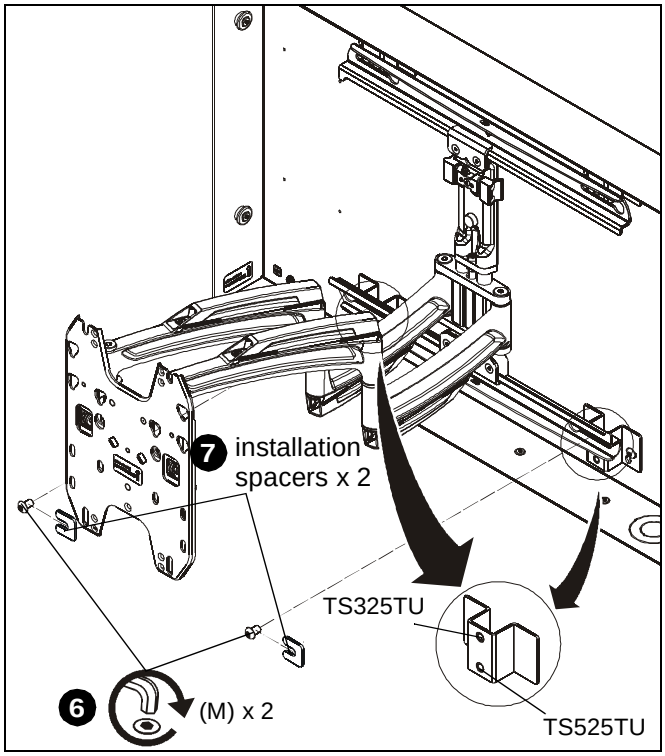

Figure 11

7. Place two installation spacers (included with TS325TU/TS525TU) over two 5/16-18 x 1/2” button head cap screws (M). (See Figure 11)
8. Tighten two screws (M) to secure lower wall plate to lower attachment brackets.
9. Loosen flat head cap screws on upper carriage rail in order to loosen white spacer. (See Figure 12)
10. Remove white spacer from mount. (See Figure 12)
11. Tighten flat head cap screws. (See Figure 12)

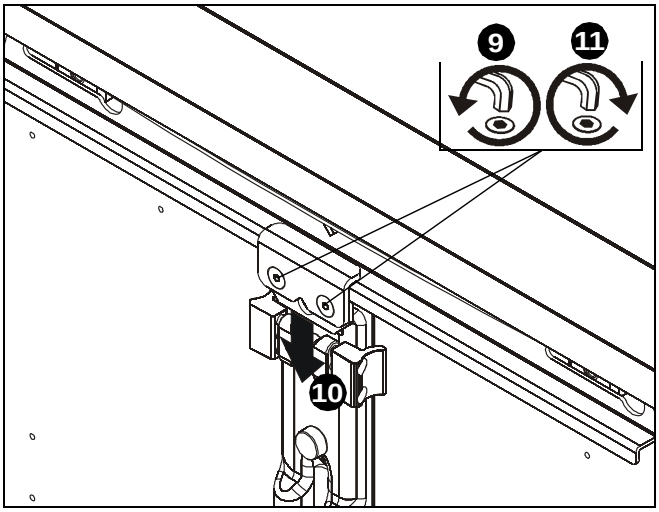

Figure 12

12. Complete TS325TU/TS525TU installation following TS325TU/TS525TU installation instructions.

Trim Kit (Optional)

1. Remove paper covering adhesive and affix three tape squares (K) to inside lower flange of each trim piece (G). (See Figure 13)
2. Orient trim pieces (G). (See Figure 13)
3. Remove paper covering adhesive back from tape squares (K) on trim and press trim (G) against inner wall of box. (See Figure 13)

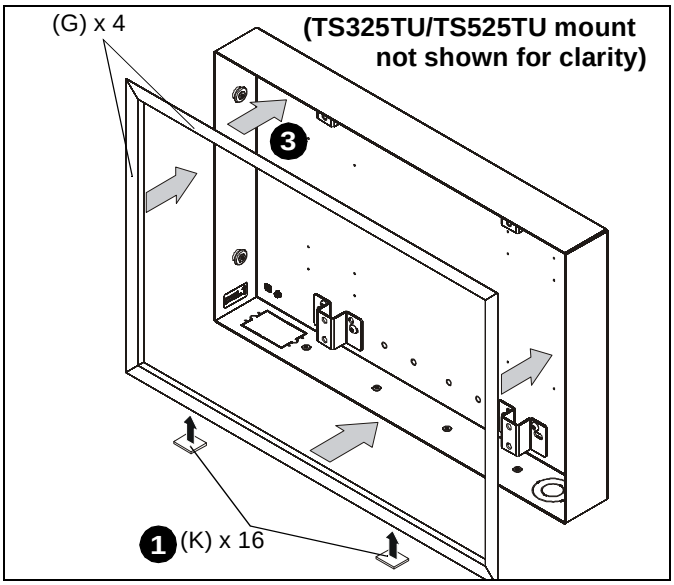

Figure 13

Cable Management

1. Attach all cables to display.
2. If necessary, use cable tie mounts (H) and cable ties (J) to secure cables within TA500.

Our Mounts. **Your Vision.**

Chief Manufacturing, a products division of Milestone AV Technologies

8800-002234 Rev03
©2014 Milestone AV Technologies
www.chiefmfg.com
06/14

USA/International
A 6436 City West Parkway, Eden Prairie, MN 55344
P 800.582.6480 / 952.225.6000
F 877.894.6918 / 952.894.6918

Europe
A Franklinstraat 14, 6003 DK Weert, Netherlands
P +31 (0) 495 580 852
F +31 (0) 495 580 845

Asia Pacific
A Office No. 918 on 9/F, Shatin Galleria
18-24 Shan Mei Street
Fotan, Shatin, Hong Kong
P 852 2145 4099
F 852 2145 4477

30% POST-CONSUMER CONTENT