STATUS: JN 06/18/2013 - RELEASED ON ECO: 500008123

TECH-000104

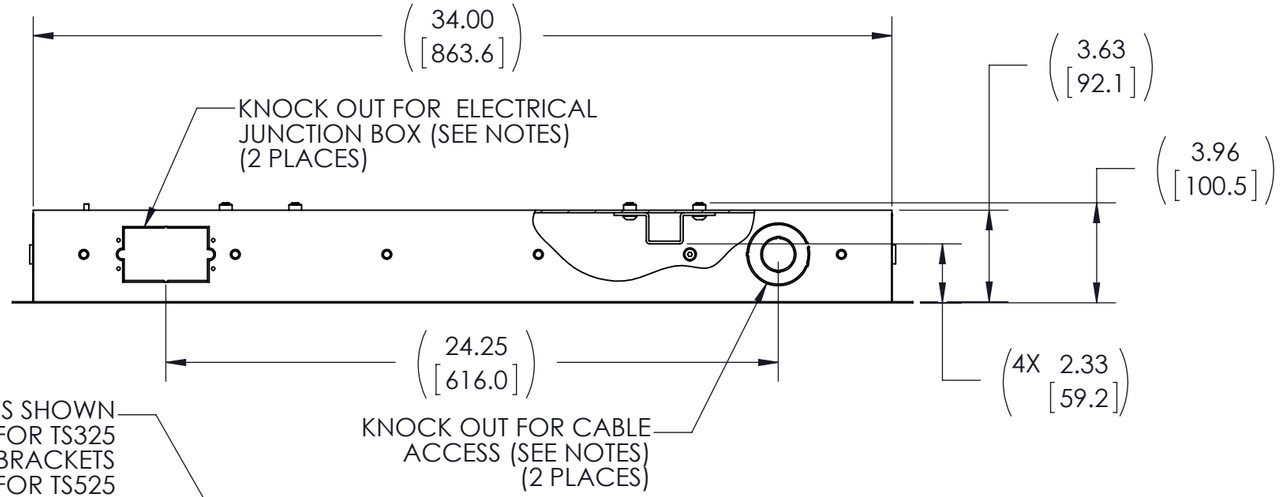

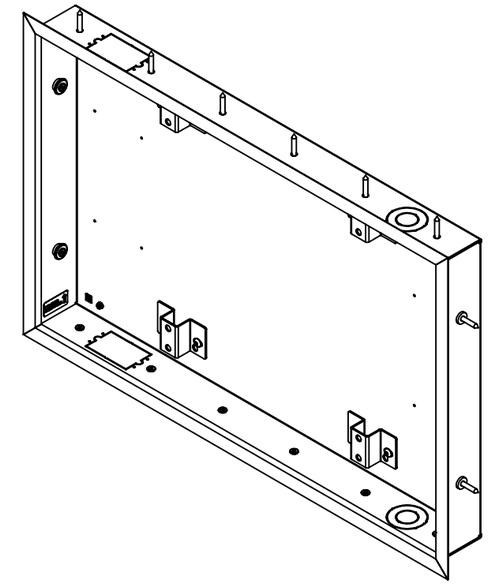

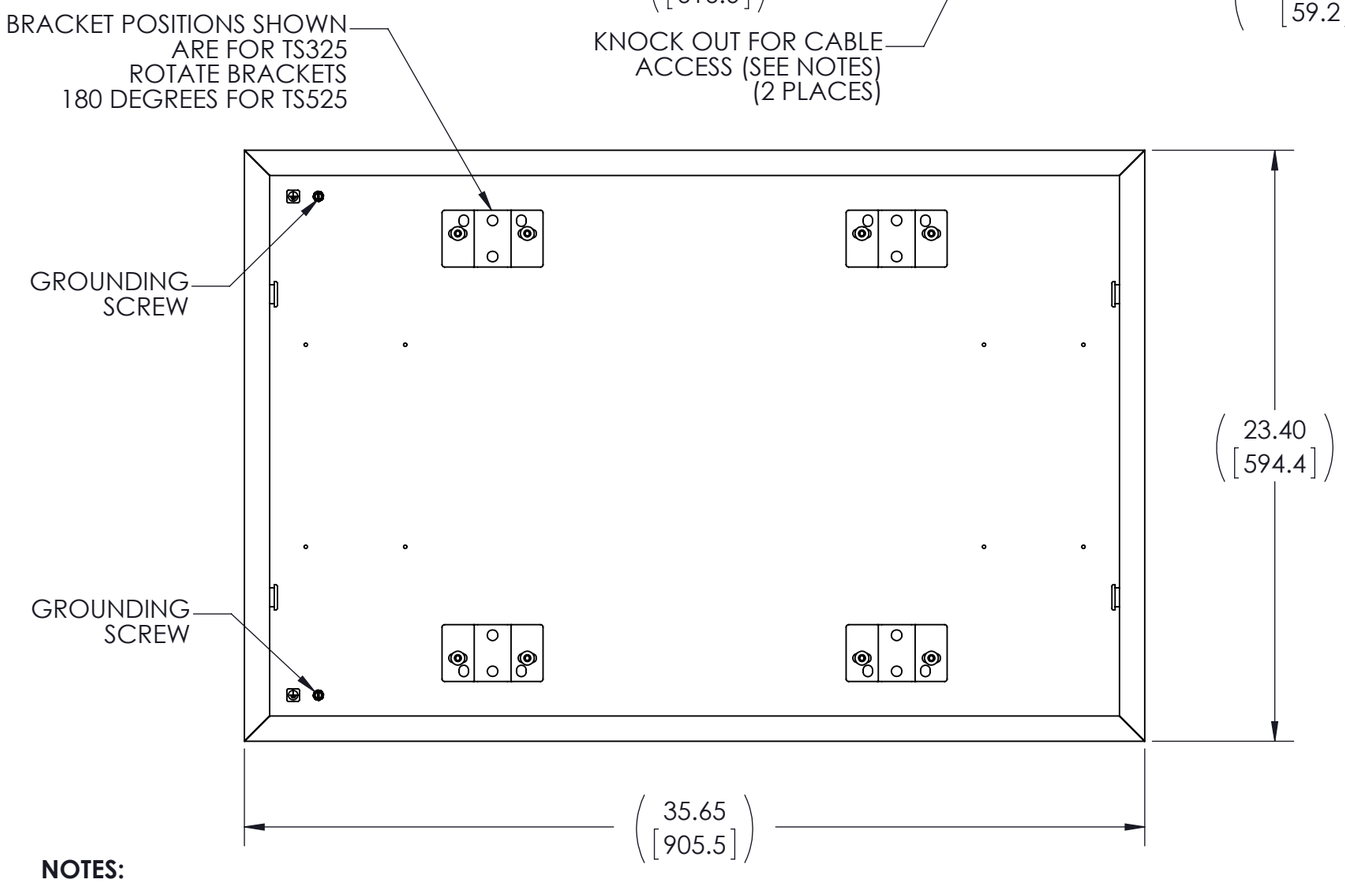

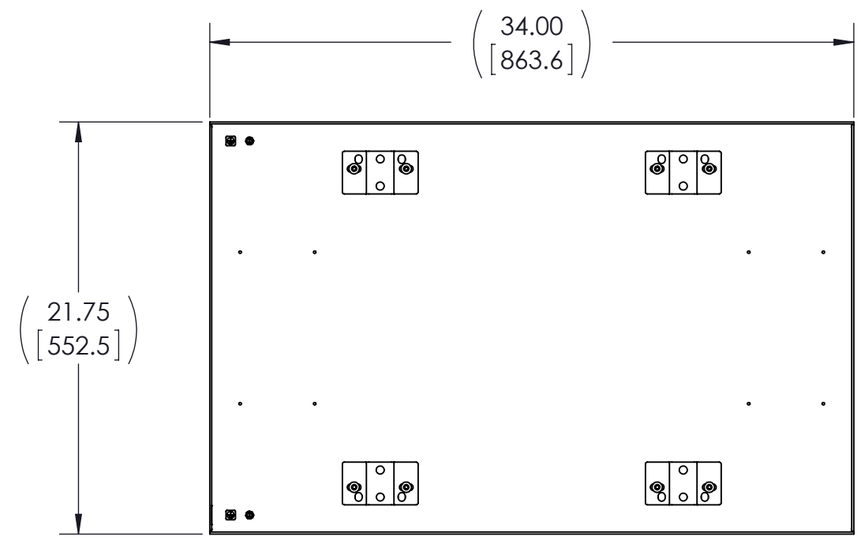

TRIM NOT SHOWN
(USE THESE DIMENSIONS FOR CUTOUT)

NOTES:

1. ELECTRICAL KNOCK OUTS:
   - SINGLE GANG RACO 590. STEEL CITY CY 1/2, OR SIMILAR STYLE ELECTRICAL BOX.
   - 1" AND 2" TRADE PIPE CONDUIT.
2. PRODUCT WORKS WITH TS525 AND TS325.

THE INFORMATION AND DESIGNS CONTAINED IN THIS DRAWING ARE CONFIDENTIAL AND THE PROPRIETARY PROPERTY OF MILESTONE AV TECHNOLOGIES NEITHER THIS DESIGN NOR ANY INFORMATION CONTAINED IN THIS DRAWING MAY BE REPRODUCED OR DISCLOSED TO OTHERS WITHOUT THE EXPRESS WRITTEN CONSENT OF MILESTONE AV TECHNOLOGIES.

CAD GENERATED DRAWING, DO NOT MANUALLY UPDATE.

DRAWN BY	LRP	8/20/2012
ENG APPROVAL	LRP	8/20/2012
MFG APPROVAL		
QA APPROVAL		

CHIEF
6436 CITY WEST PKWY
EDEN PRAIRIE MN, 55344
PHONE: 866-977-3901
FAX: 877-894-6918

DESCRIPTION: **THINSTALL IN-WALL BOX - LARGE**

MODEL NO.: **TA500**

SHEET 1 OF 2 | SCALE **1:8** | SIZE **B** | DWG. NO. **TECH-000104** | REV. 01

STATUS: JN 06/18/2013 - RELEASED ON ECO: 500008123

TECH-000104

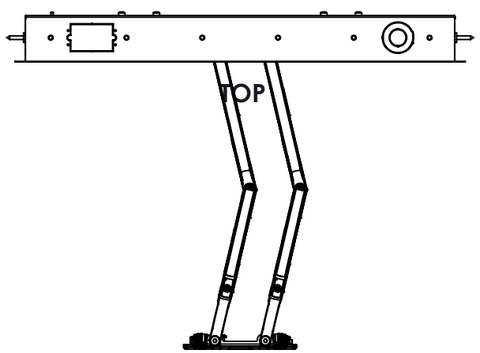

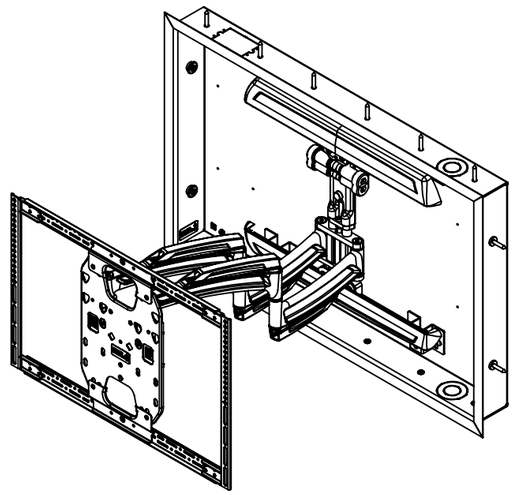

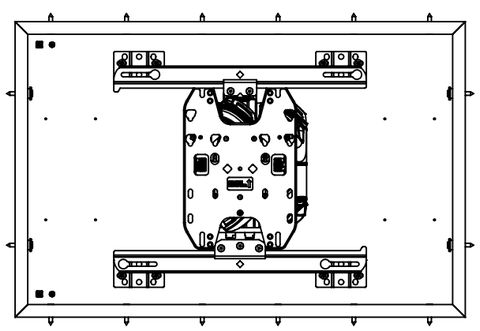

FRONT

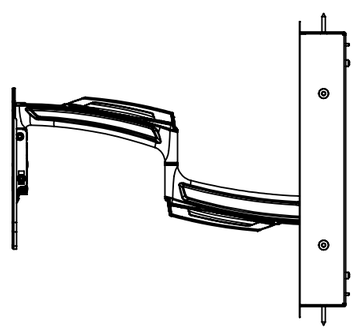

RIGHT

SWING ARM LARGE BOX WITH TS325

FULLY RETRACTED MONITOR WILL BE FLUSH WITH WALL
FULLY EXTENDED MONITOR WILL BE 22.67 FROM WALL
MAX TILT IS 15 DEGREES

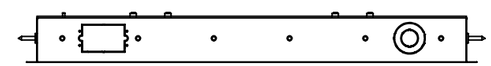

TOP

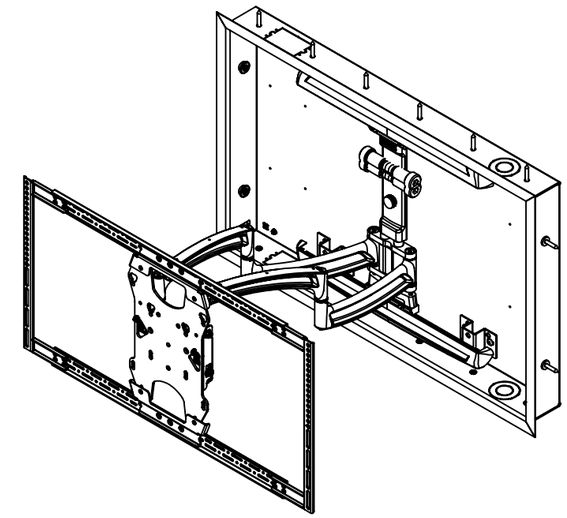

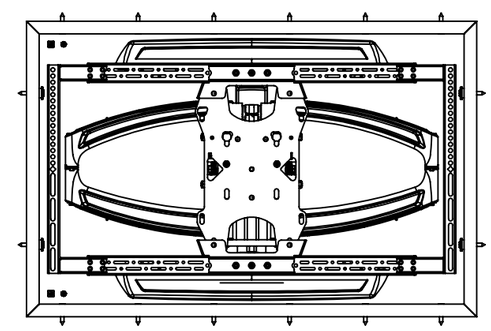

FRONT

RIGHT

SWING ARM LARGE BOX WITH TS525

FULLY RETRACTED MONITOR WILL BE FLUSH WITH WALL
FULLY EXTENDED MONITOR WILL BE 23.34 FROM WALL
MAX TILT IS 15 DEGREES

THE INFORMATION AND DESIGNS CONTAINED IN THIS DRAWING ARE CONFIDENTIAL AND THE PROPRIETARY PROPERTY OF MILESTONE AV TECHNOLOGIES NEITHER THIS DESIGN NOR ANY INFORMATION CONTAINED IN THIS DRAWING MAY BE REPRODUCED OR DISCLOSED TO OTHERS WITHOUT THE EXPRESS WRITTEN CONSENT OF MILESTONE AV TECHNOLOGIES.

CAD GENERATED DRAWING, DO NOT MANUALLY UPDATE.

DRAWN BY	LRP	8/20/2012
ENG APPROVAL	LRP	8/20/2012
MFG APPROVAL		
QA APPROVAL		

CHIEF®
6436 CITY WEST PKWY
EDEN PRAIRIE MN, 55344
PHONE: 866-977-3901
FAX: 877-894-6918

DESCRIPTION: **THINSTALL IN-WALL BOX - LARGE**

MODEL NO.: **TA500**

SHEET 2 OF 2	SCALE	SIZE	DWG. NO.	REV.
	1:8	B	TECH-000104	01