TECHNICAL DATA SHEET - SmartMount® Articulating Wall Arm for 32" to 47" flat panel screens

peerless®

MODELS: RTFPA45, RTFPA45S, RTFPA45U, RTFPA45US, SA745P, SA745P-S, SA745PU, SA745PU-S

The new SmartMount® 700 Series Arms are more than just another pretty mount. With a full 1" of internal cable management, the new SA745 models provide the most cable management in the industry for a truly clean installation. Its unique single stud design allows an easy installation and optimal electrical and A/V component cable access. The SA745 models are UL-listed for strength and reliability.

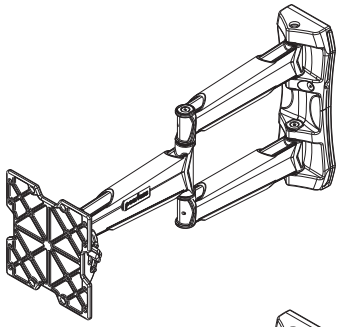

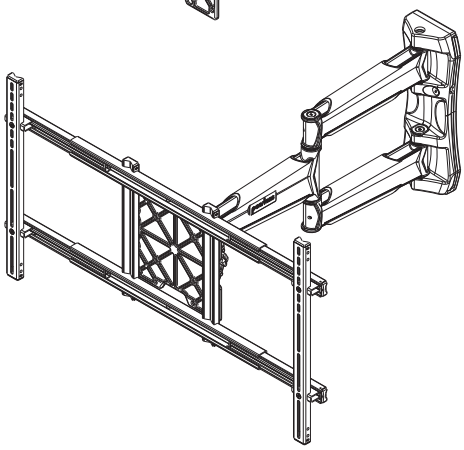

Features:

- Arm extends up to 27.8" from wall (plus thickness of adapter plate)
- SA745P includes VESA® 100/200 x 100/200/200 adapter plate and is compatible with PLP dedicated adapter plates
- Universal models adapt to screens with mounting holes up to 30.13" W x 17.24" H
- 1" clearance per channel for clean and simple cable management
- One-touch tilt allows adjustment of +15/-5° without the use of tools
- Three pivot points with up to 180° swivel
- ±2.5° roll to level screen horizontally
- Allows portrait or landscape screen orientation

Accessories:

- SCS222: Double Stud Dual Component Shelf System
- SCS212: Dual Component Shelf System
- SCS221: Double Stud Component Shelf
- SCS211: Component Shelf
- ACC924/926: Cable Management Wall Channel
- ACC925: Security Fasteners
- MSA-101 (S): Center Channel Speaker Mount
- MSA-301 (S): Center and Side Speaker Mount
- WSP745: Metal Stud Wall Plate for SA745 Models

RTFPA45, RTFPA45S, SA745P, SA745P-S

Dimensions:

Weight:
21.5 lb (9.8 kg)

Shipping weight:
26 lb (11.8 kg)

Maximum Load Capacity:
90 lb (41 kg)

Shipping Carton dimensions:
L = 22.125 in (562 mm)
W = 16 in (406 mm)
H = 6.75 in (171 mm)

RTFPA45U, RTFPA45US, SA745PU, SA745PU-S

Dimensions:

Weight:
29.5 lb (13.4 kg)

Shipping weight:
33.38 lb (15.1 kg)

Maximum Load Capacity:
90 lb (41 kg)

Shipping Carton dimensions:
L = 22.05 in (560 mm)
W = 15.75 in (400 mm)
H = 6.69 in (170 mm)

ARCHITECTS SPECIFICATIONS

The SmartMount® Articulating Wall Arm shall be Peerless models _____ and shall be located where indicated on the plans. It shall feature adjustable 10° of forward tilt and -5° backward tilt. Assembly and installation shall be done according to instructions provided by the manufacturer.

Peerless Industries, Inc.
3215 W. North Ave. Melrose Park, IL 60160
708-865-8870 800-865-2112 Fax 708-865-2941
www.peerlessmounts.com

ISSUED: 03-22-07 SHEET NO: 095-9700-4 10-26-09

© 2007, Peerless Industries, Inc. All rights reserved.
All other brand and product names are trademarks or registered trademarks of their respective owners

TECHNICAL DATA SHEET

All dimensions = inch (mm)

MODELS: RTFPA45, RTFPA45S, RTFPA45U, RTFPA45US, SA745P, SA745P-S, SA745PU, SA745PU-S

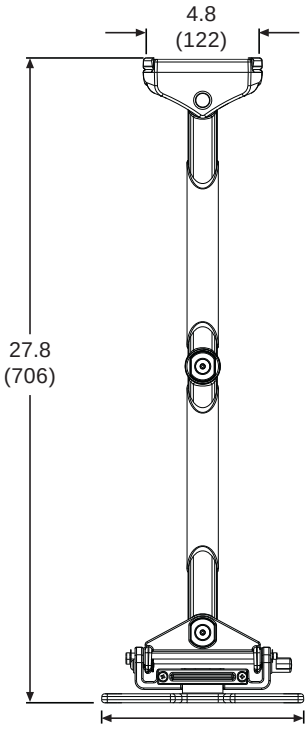

Extended Top View

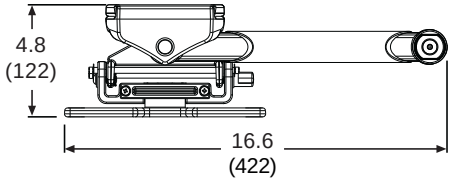

Collapsed Top View

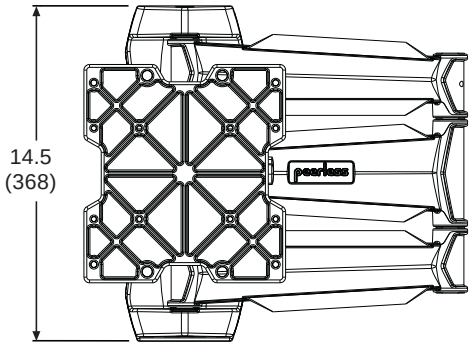

Collapsed Front View

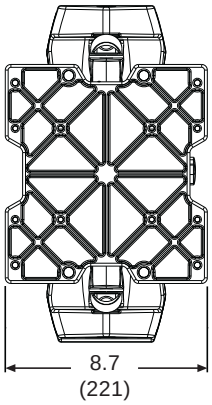

Extended Front View

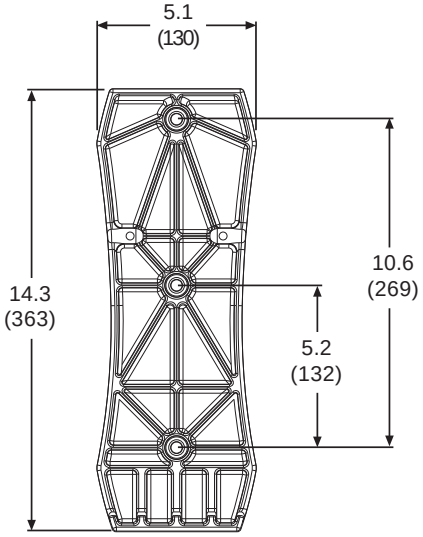

Wall Plate Detail

Peerless Industries, Inc.
3215 W. North Ave. Melrose Park, IL 60160
708-865-8870 800-865-2112 Fax 708-865-2941
www.peerlessmounts.com

ISSUED: 03-22-07 SHEET NO: 095-9700-4 10-26-09

© 2007, Peerless Industries, Inc. All rights reserved.
All other brand and product names are trademarks or registered trademarks of their respective owners

TECHNICAL DATA SHEET

MODELS: RTFPA45, RTFPA45S, RTFPA45U, RTFPA45US, SA745P, SA745P-S, SA745PU, SA745PU-S

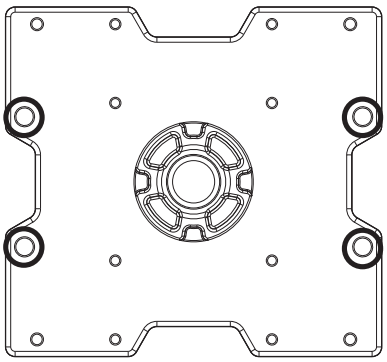

HOLE PATTERN FOR USE WITH UNIVERSAL ADAPTER BRACKET OR DEDICATED ADAPTER PLATE

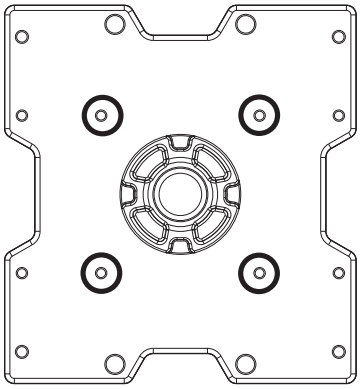

VESA® 100 x 100

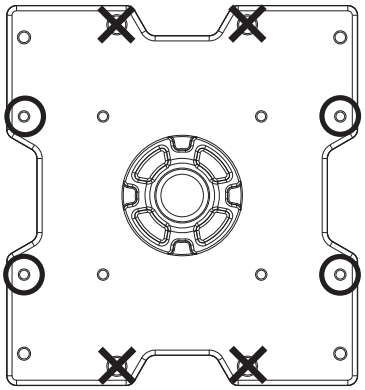

VESA® 200 x 100

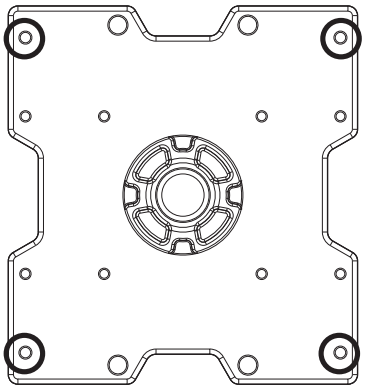

VESA® 200 x 200

Front View Adapter Plate Details

Peerless Industries, Inc.
3215 W. North Ave. Melrose Park, IL 60160
708-865-8870 800-865-2112 Fax 708-865-2941
www.peerlessmounts.com

ISSUED: 03-22-07 SHEET NO: 095-9700-4 10-26-09

© 2007, Peerless Industries, Inc. All rights reserved.
All other brand and product names are trademarks or registered trademarks of their respective owners

TECHNICAL DATA SHEET

MODELS: RTFPA45, RTFPA45S, RTFPA45U, RTFPA45US, SA745P, SA745P-S, SA745PU, SA745PU-S

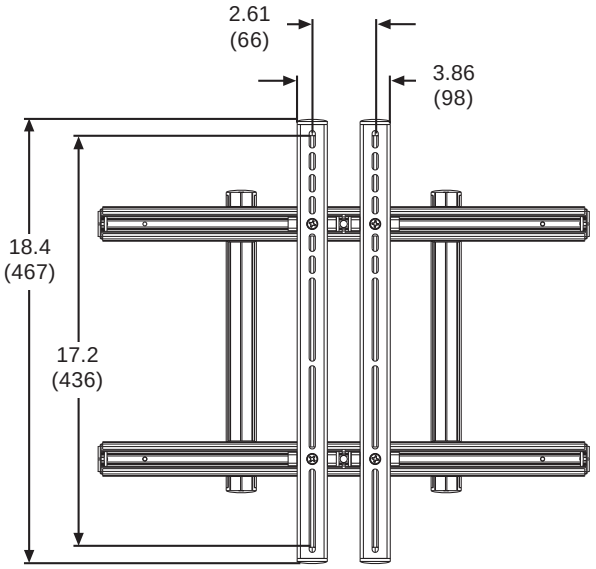

Universal Adapter Bracket Collapsed Front View

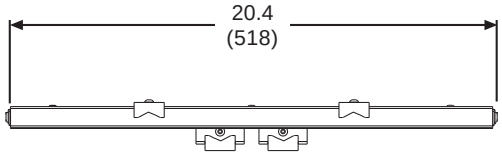

Universal Adapter Bracket Collapsed Top View

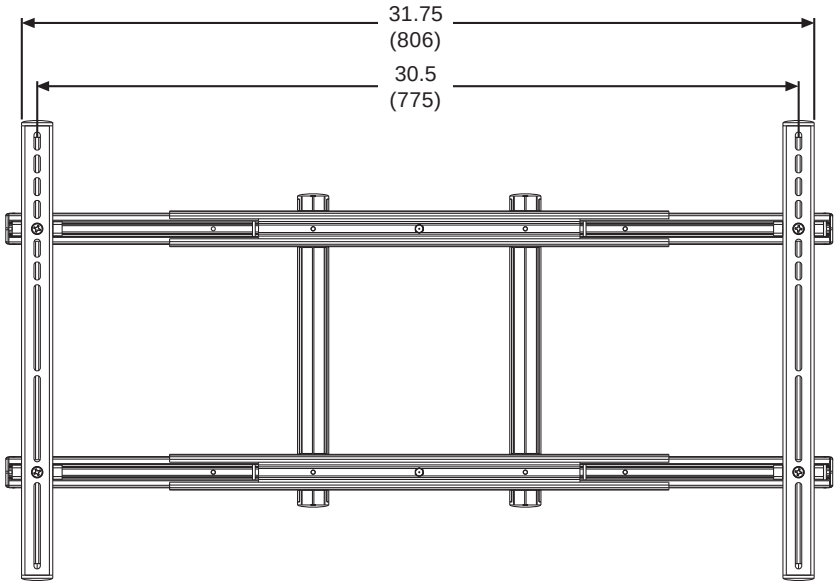

Universal Adapter Bracket Extended Front View

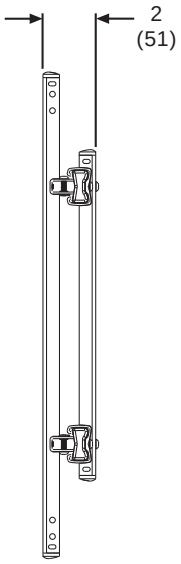

Universal Adapter Bracket Side View

Peerless Industries, Inc.
3215 W. North Ave. Melrose Park, IL 60160
708-865-8870 800-865-2112 Fax 708-865-2941
www.peerlessmounts.com

ISSUED: 03-22-07 SHEET NO: 095-9700-4 10-26-09

© 2007, Peerless Industries, Inc. All rights reserved.
All other brand and product names are trademarks or registered trademarks of their respective owners